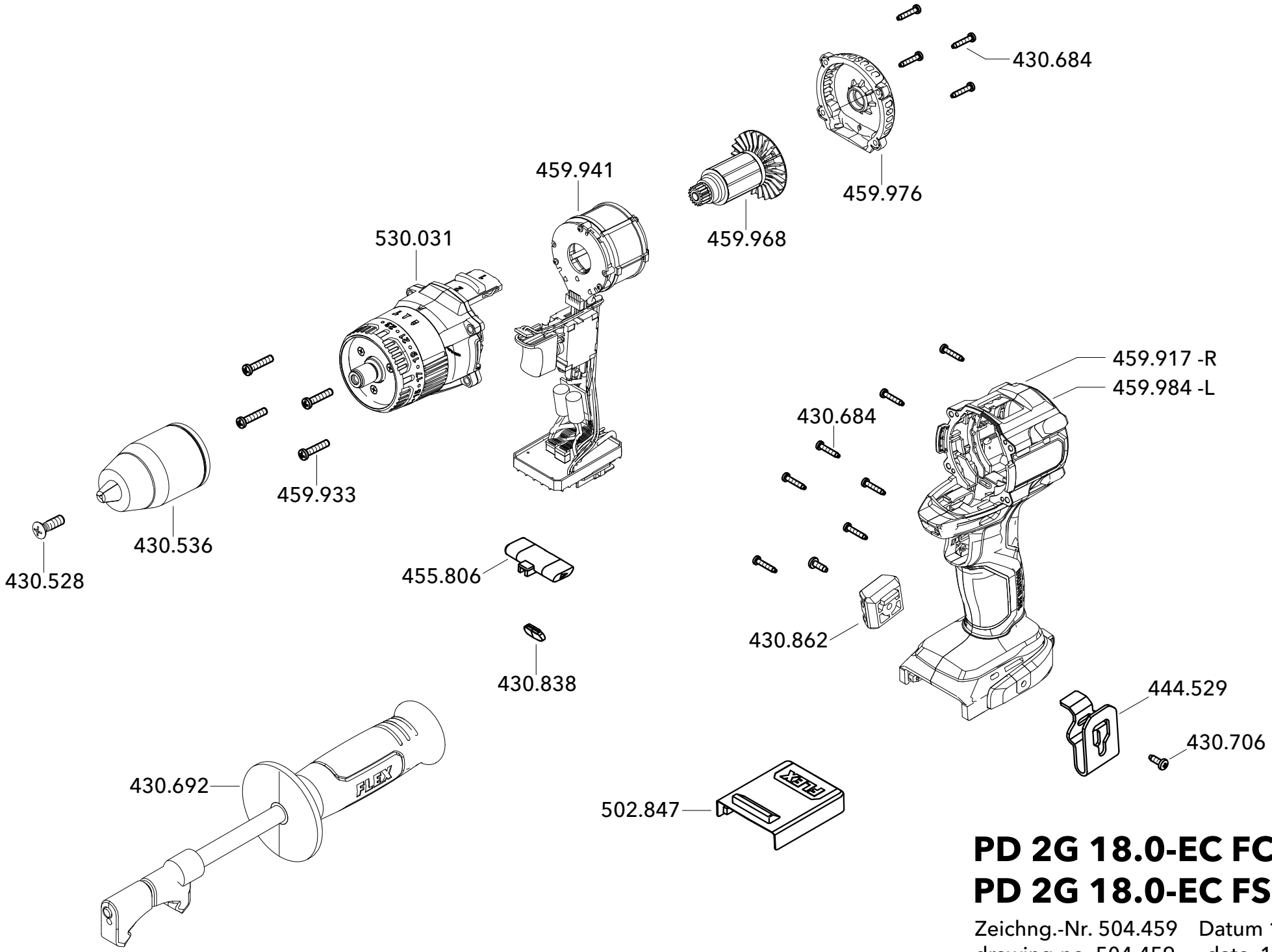

PD 2G 18.0-EC FC
PD 2G 18.0-EC FS 55

Zeichng.-Nr. 504.459 Datum 10-2023
drawing-no. 504.459 date 10-2023